LISUN	Wuhan LiXing(Torch) Power Sources Co.,Ltd		
Controlled Document's No.	Q/LX.S.E.07.015-2020	**Edition/Status**	B/0

Button-type Li/MnO_2 Battery

Specification

Model: CR2032H

Customer:

Customer's opinion:

Signature:

Date:

Add: No.7, Guan Dong Science Park, East Lake High Technology Development Zone. Wuhan Hubei P.R.China
Tel: 027-87561426 / 87561322
Fax: 027-87561049

No unit or individual is allowed to copy or transmit this specification without written authorization by Wuhan LiXing(Torch) Power Sources Co.,Ltd

Edit: 2020.5.8 Check: 王登攀 Recheck: 侯文秀 Approval: 侯文秀 2020.5.8

Index

1. Purpose 3

2. Description and Model 3

3. Technical parameters 3

4. Figure and Dimension 3

5. Appearance 4

6. Performance 4

6.1 Characteristic 4

6.2 Performance test 4

6.3 Environment and Safety performance 5

7. Test condition 7

7.1 State of batteries: 7

7.2 Normal testing environment: 7

7.3 Test precision: 7

8. Packaging 7

9. Environment requirement 7

10. Producing standard and Certification 8

11. Transportation 8

12. Information for safety 8

13. Storage 10

14. Declaration 10

No unit or individual is allowed to copy or transmit this specification without written authorization by Wuhan LiXing(Torch) Power Sources Co.,Ltd

Edit: 2020.5.8 Check: 2020.05.08 Recheck: Approval: 20.5.8

1. Purpose

1.1 In order to avoid errors and deviations by different testing method or condition, we established this specification to define the battery model and test method of lithium battery manufactured by Lixing.

1.2 Give some guidance for using our products.

2. Description and Model

Table 1

Description	Model
Battery Lithium manganese dioxide button battery	CR2032H

3. Technical parameters

Table 2

No.	Items	Characteristics
1	Nominal Capacity*	240 mAh (Continuously discharged under 15kΩ load till 2.0V end-point voltage at the temperature of 20℃±2℃)
2	Nominal Voltage	3.0V
3	Operating Temperature range	-20～+60℃
4	Max. Pulse Current	15mA
5	Max. Continuous Discharge Current	5 mA
6	Structures	Manganese dioxide cathode,lithium anode, organic electrolyte, polypropylene separator and stainless steel cell can and cap, etc.
7	Weight for Reference	About 3.0g

* Nominal Capacity: The nominal capacity means that when discharged at 15KΩ、20±2℃、end voltage 2.0V.
(the nominal capacity may differ due to change of the discharge current, temperature and end voltage)

4. Figure and Dimension (unit: mm)

No unit or individual is allowed to copy or transmit this specification without written authorization by Wuhan LiXing(Torch) Power Sources Co.,Ltd

Edit: 2020.5.8 Check: 2020.05.8 Recheck: Approval: 20.5.8

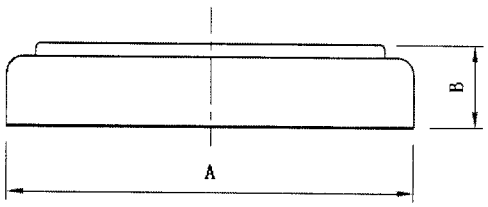

A	$\Phi 20.0_{-0.3}$
B	$3.2_{-0.3}$

5. Appearance

The surfaces of the batteries should be clean. The mark is clear. There should not be deformation, scar or leakage.

6. Performance

6.1 Characteristic

Table 3

No.	item	Test condition	Performance within one year under room temperature
1	Open circuit voltage Room temperature Low temperature High temperature	 20±2 ℃ -20±2 ℃ 60±2 ℃	 3.0～3.5V 3.0～3.5V 3.0～3.5V
2	Close circuit voltage Room temperature Low temperature High temperature	Discharge load：15KΩ 20±2 ℃ -20±2 ℃ 60±2 ℃	 ≥3.0V ≥2.9V ≥3.0V
3	Working life Room temperature Low temperature High temperature	Discharge load：15KΩ End voltage：2.0V 20±2 ℃ -20±2 ℃ 60±2 ℃	 ≥1100hrs ≥660hrs ≥1050hrs

6.2 Performance Test

6.2.1 Six samples for each testing item

6.2.2 Samples should be placed for 2 hours under the requested temperature, which the

No unit or individual is allowed to copy or transmit this specification without written authorization by Wuhan LiXing(Torch) Power Sources Co.,Ltd

Edit: 青戒 2020.5.8 Check: 王[illegible] 2020.05.08 Recheck: 侯文秀 Approval: 侯文秀 20.5.8

test will be done.

6.3 Environment and safety performance

Table 4

No.	Item		Requirement	Method
A	Environment Performance	Altitude Simulation Test	NM、NL、NV、NC、NR、NE、NF	At 20℃±2°C, the batteries should be stored at the pressure of 11.6 KPa or less for at least six hours.
B		Temperature Cycling	NM、NL、NV、NC、NR、NE、NF	The batteries should be stored at least 6 hours at 75±2℃, then be stored at least six hours at -40±2℃. The interval between the two temperatures should be maximum 30 minutes. Repeat this process for 10 times. Then store batteries 24hours at 20±5℃,
C		Vibration	NM、NL、NV、NC、NR、NE、NF	The batteries should be subjected to a simple harmonic motion with an amplitude of 0.8mm(1.6mm total maximum excursion). The frequency is to be varied at the rate of 1Hz per minute between 10 and 55Hz.The test should be last 90min～100min and the cell should be tested in two mutually perpendicular direction.
D		Shock	NM、NL、NV、NC、NR、NE、NF	The batteries should be secured to the testing machine by means of a rigid mount which will support all mounting surfaces of each test battery. Each battery should be subjected to a total of three shocks of equal magnitude. The shocks are to be applied in each of the three mutually perpendicular directions. Each shock is to be applied in a direction perpendicular to the face of the battery. For each shock the battery is to be accelerated in such a manner that, during the initial 3ms, the minimum average acceleration is $75\times9.8 m/s^2$. The peak acceleration should be between $125\times9.8 m/s^2$ ～ $175\times9.8 m/s^2$.
E	Safety Performance	External Short Circuit	NT、NR、NE、NF	The batteries to be tested should be temperature stabilized so that its external case temperature reaches 57 ± 4 °C and then the batteries should be subjected to a short circuit condition with a total external resistance of less than 0.1 ohm at 57 ± 4 °C. This short circuit condition is continued for at least one hour after the battery external case temperature has returned to 57 ±

No unit or individual is allowed to copy or transmit this specification without written authorization by Wuhan LiXing(Torch) Power Sources Co.,Ltd

Edit: 2020.5.8 Check: 2020.05.08 Recheck: Approval: 20.5.8

				4°C. The battery must be observed for a further six hours for the test to be concluded. The battery to be tested should have endured vibration and shock test. Otherwise the battery endured altitude simulation test should be test.
F		Impact	NT、NE、NF	The test sample battery is to be placed on a flat surface. A 15.8 mm diameter bar is to be placed across the centre of the sample. A 9.1 kg mass is to be dropped from a height of 610 ± 25 mm onto the sample. The battery is to be impacted with the flat surface of the sample parallel to the flat surface and the 15.8 mm diameter curved surface lying across its centre. The battery should be impacted for one time.
G	Safety Performance	Forced-discharge	NE 、NF	Each battery should be forced discharged at ambient temperature of 23℃±3℃by connecting it in series with a 12 V D.C. power supply at an initial current equal to the maximum discharge current* specified by the manufacturer. Each battery should be forced discharged for a time equal to the time in which a new cell is discharged to 2.0V .
H		Abnormal Charge	NE、NF	Sample batteries are to be connected reversely with a D.C. power supply , and subjected to a constant charging current at 3 times the I_c Charge time $T_C=2.5\times C_n/(3\times I_c)$ **
I		Free Drop	NV、NE、NF	The not-discharged battery is to be dropped from a height of 1m onto a concrete surface. Each sample is to be dropped six times, two times in each direction. The sample should be examined 1 hours after testing
J		Heating Test	NE、NF	The battery should be placed in an oven. The oven temperature should be increased at a rate of 5℃±2℃ per minute until the oven reached 130℃±2℃.The oven should be maintained at 130℃±2℃ for 10min.

NM: no weight loss **NL : no leakage** **NV: no venting** **NF: no fire**
NC : no short circuit **NR: no rupture** **NE: no explosion**
NT: no overheating (the temperature at the surface of battery not exceed 150℃)

* Max discharge current: in table 2 means maximum continuous discharge current .

** $T_C=2.5\times C_n/(3\times I_c)$

T_C—test time;

C_n—nominal capacity;

No unit or individual is allowed to copy or transmit this specification without written authorization by Wuhan LiXing(Torch) Power Sources Co.,Ltd

Edit: 青(武) 2020.5.8 Check: 王登攀 2020.05.08 Recheck: 侯文香 Approval: 侯文香代 20.5.8

I_c—the abnormal charge current for the tests provided by battery supplier. Ours is I_c 10mA

7. Test condition

7.1 State of batteries

The batteries should be marked with manufacture date(year, month, date)

7.2 Normal testing environment

If no special requirement, test should be made under the temperature of 20±5℃ and relative humidity of 45%-75%.

7.3 Test precision

The measuring tolerances relative to the specified or actual values should be within these range:

Voltage	Current	Capacity	Temperature	Time	Weight	Dimension
±1%	±1%	±1%	±2℃	±0.1%	±0.1%	±0.1%

These tolerances include all errors caused by precision of testing instrument, testing method and testing process.

8. Packaging

Dimension of box	Net weight	Gross weight
355mm×285mm×275mm	18.0KG	19.6KG

Normal package : 5600 pcs per box.

9. Environment requirement

The product meets ROHS standard. The positive of the battery is marked as follows:

No unit or individual is allowed to copy or transmit this specification without written authorization by Wuhan LiXing(Torch) Power Sources Co.,Ltd

Edit: 2020.5.8 Check: 2020.05.08 Recheck: Approval: 20.5.8

10. Producing standard and Certification

Our battery was produced according to the IEC-60086 standard, UL1642 safety authentication (MH26236) and UN shipment authentication.

11. Transportation

- The Battery should be stored away from solarization, fire, rain, water, and never put together with corrosive during transportation.
- Vibration and shock during transportation and load-and-unload should be restrict to a minimum level.
- The height should not exceed 1.5m for cardboard packages.
- The battery if transported by sea should be stored away from ship engines during prolonged transit, and not left for long periods in unventilated environment during summer.

12. Information for safety

! Dangerous

- Do not overheat battery or dispose of battery in fire.
- Do not put battery together with metalwork such as necklace, coins, etc in one bag， or store them together
- Do not short-circuit battery.
- Do not inset battery in reverse. Observe the + and – markings on battery and equipment.
- Do not disassemble battery.
- Do not weld or solder directly to battery.
- Do not use deformed battery or battery with serious scar.

No unit or individual is allowed to copy or transmit this specification without written authorization by Wuhan LiXing(Torch) Power Sources Co.,Ltd

Edit: 2022/1/12 Check: 22.01.12 Recheck: 22.1.12 Approval: 22.1.12

— Read the guide carefully before using battery. Unsuitable operation will make batteries overheat, fire, explode, destroy or reduce battery capacity.

! **Warning**

— Do not place the battery in heater, washer or high-pressure container.

— Do not use the battery together with different kind of or different type of battery.

— Stop using when the battery become heat, emit smell or appear other abnormality during use, or storing.

— Do not recharge the battery.

— Do not force-discharge the battery.

— Keep away from the battery when the battery is leakage or emit abnormal smell.

— Wash yourself quickly when the electrolyte infiltrate to your skin or clothes.

— Wash your eyes with clean water quickly and go to hospital for further check if the electrolyte infiltrate to your eyes.

— Please contact with us in advance If two or more batteries are to be connected in a series and / or placed in a parallel arrangement.

! **Caution**

— Keep the battery away from child, avoid being swallowed.

— Read the guide carefully and pay attention to the guide when using the battery.

— Read the instrument guide carefully before installing the battery or uninstalling the battery from the instrument.

— Take out of the battery when the life of the battery is over.

— Take out of the battery and keep it under the condition of low temperature and low humidity when the battery is not used for a long time.

— Clean the battery with dry cloth before use if the connection of the battery is dirty.

— Battery should be used and stored far from the electrostatic place.

No unit or individual is allowed to copy or transmit this specification without written authorization by Wuhan LiXing(Torch) Power Sources Co.,Ltd

Edit: 青戟 2020.5.8 Check: 王登泰 2020.05.08 Recheck: 侯文秀 Approval: 侯文秀 20.5.8

13. Storage

— Battery should be stored at 10℃～25℃（never exceed 30℃）,45%~75%RH.

— Battery should not be stored next to heat sources nor in direct sunlight. The storage area should be clean，cool，dry，ventilated and weatherproof.

— The height to which battery may be stacked is clearly dependent on the strength of the packaging. As a general rule， this height should not exceed 1.5m for cardboard packages nor 3m for wooden cases.

— Store and display battery in their original package. The battery may be short-circuited or damaged if been unpacked and stacked mussily.

14. Declaration

— Please contact with Wuhan Lixing (Torch) Power Source Co., Ltd. If you have any question with this specification.

— Wuhan Lixing (Torch) Power Source Co., Ltd keep the right to change the specification.

No unit or individual is allowed to copy or transmit this specification without written authorization by Wuhan LiXing(Torch) Power Sources Co.,Ltd

Edit: 2020.5.8 Check: 2020.05.08 Recheck: 侯文秀 Approval: 侯文秀 20.5.8

Appendix 1:

CR2032H Cross section view

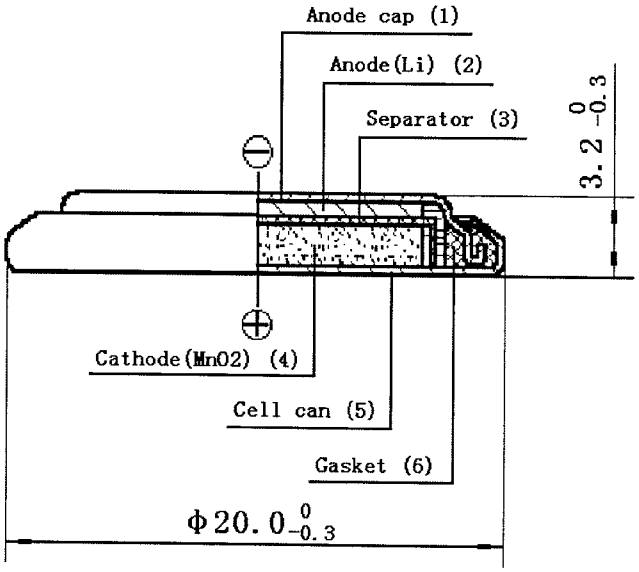

Appendix 2:

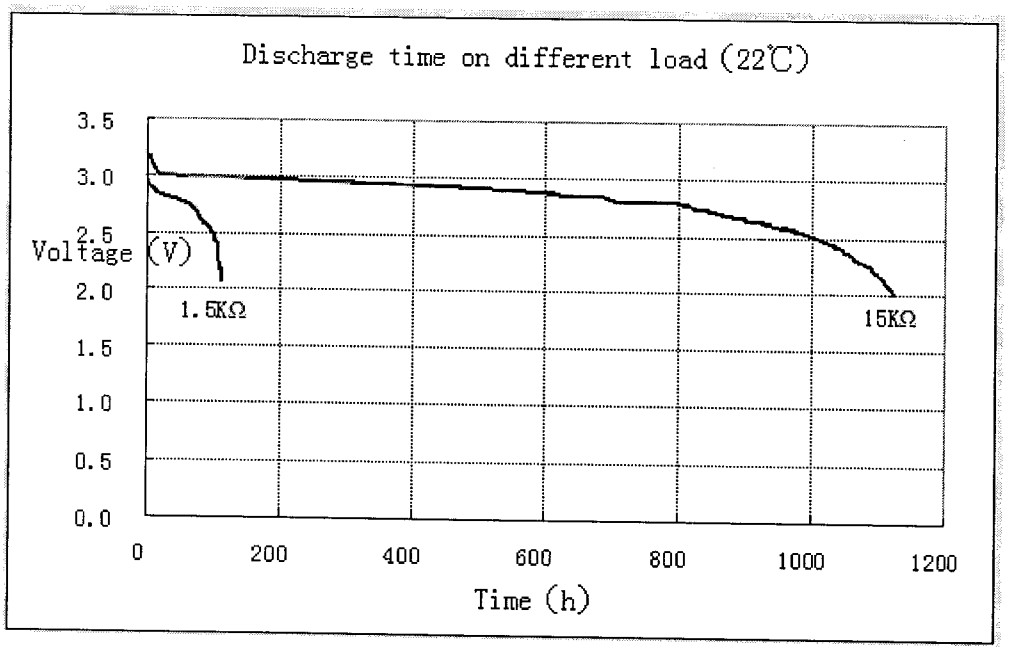

No unit or individual is allowed to copy or transmit this specification without written authorization by Wuhan LiXing(Torch) Power Sources Co.,Ltd

Edit: 20220111 Check: 胡里 22.01.11 Recheck: 侯文秀 Approval: 侯文秀 22.1.11

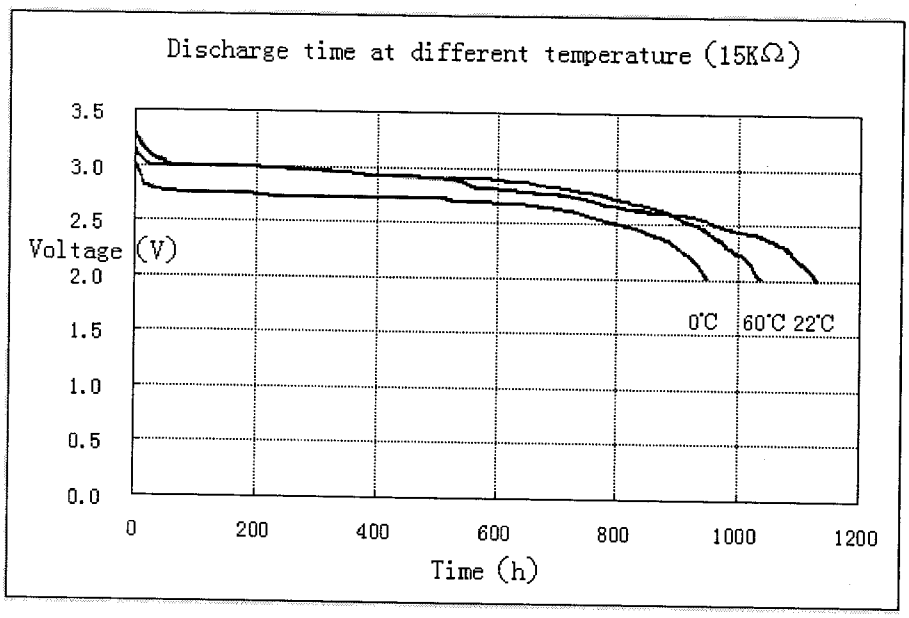

Appendix 3:

Structure Figure of Package
CR2032H5600 Pcs Per Box

1. Battery (-) (+)



2. 20Pcs Per Plate

Outline Dimensions of Plate: 136×166×7



3. 10 Plates Per Min Package



4. 28 Min Package Per Box

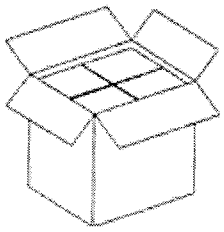

Outline Dimensions of Box: 355×285×275
Net: 18 kg
Gross: 19.6 kg

No unit or individual is allowed to copy or transmit this specification without written authorization by Wuhan LiXing(Torch) Power Sources Co.,Ltd

Edit: 2022/1/12 Check: 22.01.12 Recheck: Approval: 22.1.22